

OVNI-R

Item code	**86.I024.2641.02**
Product type	**Indoor**
Category	**Industrial**
Family	**OVNI**
Subfamily	**OVNI-R**
Pictograms	CRI 80 · CE · Driver INCL. · On Off · 1-10V

Dimensions	
Product dimensions (mm)	**357.9*170mm**

Scheme

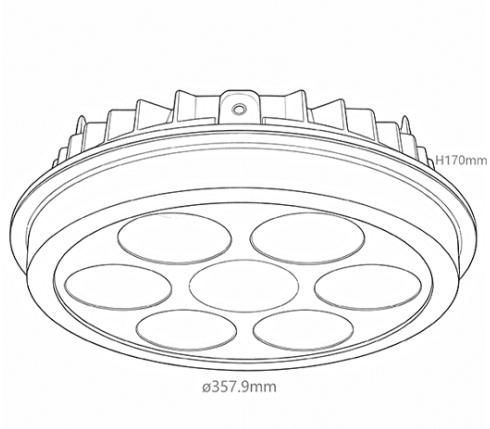

Product	
Real power (W)	**186.4**
Real luminous flux (Lm)	**13551.28**
Luminous efficiency (Lm/W)	**72.7**
Beam angle (º)	**60**
IP	**65**
Electrical feeding	**120-277V**
U. G. R	**19**
Control gear	**ON-OFF**
Colour temperature (K)	**6000**
IK	**09**